משרד התחבורה

STATE OF ISRAEL
MINISTRY OF TRANSPORT
ADMINISTRATION OF SHIPPING AND PORTS

CG9 (g)
01 December 2009

PROCEDURES AND REGULATIONS FOR DANGEROUS GOODS AND DRY CARGO IN BULK

This Notice Supersedes Notice CG9 (f)

CONTENT

1. INTRODUCTION

2. APPLICABLE REGULATIONS AND DOCUMENTS

3. TRAINING

4. REQUEST TO LOAD DANGEROUS GOODS

5. TRANSHIPMENT- DANGEROUS GOODS IN TRANSIT

6. CONTAINERS, CONSTRUCTION AND INTEGRITY

7. PLACARDING OF CARGO TRANSPORT UNITS

8. MIXED STOWAGE OF DANGEROUS GOODS (IN SAME CTU) AND OTHER REQUIREMENTS

9. SHIPS CARRYING DANGEROUS GOODS

10. CLASS 7

11. HIGH CONSEQUENCE DANGEROUS GOODS

12. CARGOES IN BULK

13. PENALTIES AND/OR SANCTIONS FOR NON-CONFORMANCE

14. REMARKS

15. APPENDIX I

16. APPENDIX II

INTRODUCTION

1. The following notice describes the procedure for loading and handling of: "Dangerous Goods" (DG) in packaged form (CS) or bulk (BC), in Israeli ports. The notice is principally aimed at Shipping Agents and Ship-Masters, however all Ship-Owners, Operators, Charterers, Planners, Manufacturers, Shippers, Cargo Consolidators, Packers and any other parties concerned, should be thoroughly familiar with the following procedure.

2. APPLICABLE REGULATIONS AND DOCUMENTS

2.1. Chapter 3 of "Port Regulations" (Safety of Navigation-1982).

2.2. CONTAINERS: "Port Regulations" (Safe Containers) 1982.

2.3. Attachment 17 (Regulation 1) "Port Regulations" 2004

2.4. IMDG (International Maritime Dangerous Goods) Code, latest Amendment.

2.5. BC CODE (Code of Safe Practice for Solid Bulk Cargoes), latest Amendment & MSBC 2009.

2.6. SOLAS 2004 – Chapter II-2 Reg. 19, latest amendment.

2.7. MARPOL 73/78- Annex III.

Please note that SOLAS Chapter II-2 Regulation 19 is compulsory from 1st January 2006. On 1st January 2010, IMDG Code Amendment 34-08 enters into force [Resolution MSC.205(81)] and is recommended to be applied as from 1January 2009 [**See Appendix II**].

3. COMPULSORY TRAINING (IMDG Code 1.3)

IMDG 1.3 indicates that personnel involved with dangerous goods directly or indirectly, should have training to an appropriate level. Safety training aims to create an employer's "Duty of Care" for the safety of others not employed by them.

The training of personnel should ensure that the staff involved with dangerous goods will be able to do the following:

- Identify the different types of dangerous goods
- Understand dangerous goods details on shipper's declarations
- Understand how packages should be marked and labelled
- Understand how to make-up, mark and label unit loads
- Understand the IMDG Code segregation rules that prohibit the mixed loading of any dangerous goods that may react dangerously
- Understand how to stow and secure packages in shipping containers so that they will not move or collapse under stress during the sea journey
- Understand the rules for placarding and labelling shipping containers
- Understand how to check loads and issue packing certificates
- Understand the relevant sections of the IMDG Code
- Understand the relevant chapter/s of SOLAS (Chapter 19 II-2 and Chapter VII) related to ship suitability to carry dangerous goods and the relevant documentation.

Certificate of fitness to deal with DANGEROUS GOODS including packing and stowing, is granted to a candidate who successfully passed a written examination at an approved training facility, which is then endorsed by IMOT.

The validity of such certificate is limited to 2 years upon which it must be renewed subject to 2 days compulsory refresher course.

4. REQUEST TO LOAD DANGEROUS GOODS

4.1. Schedule

All persons who are involved with shipment of Dangerous Goods by sea must be thoroughly conversant with the content of this notice and acquainted with the requirements of the IMDG Code and other related international Conventions. All agents, shippers, cargo forwarders or their representatives **shall undergo** a specialized training backed by appropriate certification approved by IMOT. The phasing-in process of the certification has been completed on **1st July 2008**.

The ship's master or the agent (in person) must submit the request to load Dangerous Goods or Dry Cargoes in Bulk, to IMOT inspector during working days (Sunday to Thursday), between 0800 and 1300 (0800-1100 on Fridays and/or Holiday's Eve).

Loading of **Class/1** and bulk-cargoes (Groups A, B & C of the BC Code) must be coordinated in advance and carried out under supervision of IMOT Shipping Inspector**.** Early notice of 24 hours is required (48 hours at least, if more than 10 containers of explosives are planned for loading).

The ship's Master may not commence loading any Dangerous Goods or Cargo in Bulk, prior obtaining the appropriate documents signed by IMOT Shipping Inspector.

4.2. Documentation (Configuration Management)

4.2.1. The request to load Dangerous Goods shall be submitted on appropriate form **only** (**see Appendix II**) in accordance with: Attachments IV, V and VI Regulation [((3)ב16)] Port Regulations (Safety of Navigation-1982).

4.2.2. The **two signatures** at the bottom of the document (Attachment VI) confirm that **a)** All goods conform to their actual description, chemical properties (IMDG Code and of MARPOL Annex III) and are packed and labelled accordingly. **b)** The container is packed in accordance with the requirements of IMDG Code. **Utmost care must be exercised by the shipper in order to verify packing approved by a competent authority (UN Classified IMDG 4.1.1.3/5.4.5.1).**

4.2.3. The 'Shipper's Declaration' is a legally binding declaration (IMDG 5.4.1.6.1) and shall be signed (hand written) by a competent person who is either a qualified chemistry engineer and/or a person who holds status of authority in the firm. The signatories must be in possession of **IMOT approved DG Course** certificate. The packer must also be in possession of an approved Packer's Certificate. All signatures shall be supported by full name and ID number of the signor.

4.2.4. The DG Course certificates of signatories shall be attached to the request for the loading of DG (Annex IV Port regulations-Safety of Navigation 1982).

4.2.5. The request to load cargoes classified as Dangerous/Noxious in the form of Liquid and/or Liquefied Bulk should be submitted with the appropriate documents (See Shipping Notices Chapter 8 "Carriage of Goods", CG8).

4.2.6. **Additional Forms**

a) List of all Dangerous Goods designated for loading as per Annex V Port Regulations, (in case of Solid Bulk Cargoes, a Shipper's Declaration).

b) Cargo Plan in triplicate including:

Dangerous Goods and reefer containers (Including containers in-transit) should be highlighted **in** conspicuous colours on the plan. The Class and the U.N Number shall be marked in clear and legible letters.

c) "Declaration of Containerised Dangerous Goods for International Transport" (For each or batch of containers), as per Annex VI (Port Regulations).

Any photocopied forms submitted to IMOT for approval, must be clear and legible (**including small print**).

* Also see "Ship Suitability Criteria" Chapter 9.1 of this notice.

ALL FORMS MUST BE IN PRINT!

5. TRANSHIPMENT AND/OR DANGEROUS GOODS IN TRANSIT

5.1. Transhipment is a process during which dangerous goods are unloaded from one vessel and loaded to another vessel including intermediate short term on- shore storage.

In the transhipment process no repacking and/or inspection of the goods by port authority takes place, all seals must remain intact and due precaution undertaken to prevent any HAZMAT accidents.

5.2. In case of DG in transhipment and/or in-transit, the following forms shall be made available if requested by IMOT inspector:

- Detailed information regarding the content of the cargo (proper shipping name, UN No, Class, Quantity, etc),
- Declaration of containerised dangerous goods for international transport (Inter-modal) and /or MSDS of the goods if requested by IMOT.
- In case a large consignment of containers of any type of Dangerous Goods (including Class 9) is scheduled for transhipment, notification of 24 hours in advance and IMOT approval is required.

Due consideration should be given to the recommendation of the "National Security Council": ***Ships which carry Explosives/ammunition destined for Israel only, are permitted to enter Israeli ports.***

However, vessels scheduled to load/discharge Class/1 containers while retaining other in-transit Class/1 containers on board, may do so provided:

1. Port Authority permission is obtained in advance
2. Immediate cargo operation takes place upon berthing
3. Cargo operation is completed within 6 hours
4. All safety procedures are observed in accordance with "Port Regulations" (Such as Safety Radii) and any additional port requirements

Special consideration be exercised with regard to Class 1.4S or similar in view of its low risk

6. CONTAINERS, CONSTRUCTION AND INTEGRITY

6.1. Certified Container *

A certified container must be inspected periodically in accordance with international law (At intervals not exceeding 30 months) or be under continuous supervision (ACEP). The CSC metal plate, attached to the door must be clean and legible ***(See Appendix I Adopted from the Regulations of USCG).**

6.2. Non-Certified or "One Way" Containers

Shipping of Class/1 or any other Dangerous Goods in the so-called "One Way Containers" is forbidden.

Containers, which do not conform to International Regulations or judged unfit by IMOT Shipping Inspector shall be refused for loading or if already on board may be ordered to be unloaded and re-packed into other CTUs.

7. PLACARDING OF CARGO TRANSPORT UNITS

7.1. All placards used on CTUs containing dangerous goods must conform to the requirements of IMDG Code Chapter 5.3. Special attention shall be given to the quality of the placards used in order to conform to the requirements of 5.3.1.1.1.2 namely: *The methods of placarding and marks and signs..... shall be such that this information will still be identifiable on cargo transport units surviving* ***at least three months' immersion*** *in the sea.*

7.2. All shippers of dangerous goods from Israel must purchase CTUs' placards from manufacturer/s that guarantee their quality and conformity and obtained approval of a "Competent Authority" (e.g. HAZMARK Inc. http://www.hazmark.com Or www.cc-marine.com). The proof of purchase and use of approved placards should be available at all times in order to be presented to IMOT Shipping Inspector upon request.

8. MIXED STOWAGE OF DANGEROUS GOODS (IN SAME CTU) AND OTHER REQUIREMENTS

In general, cargoes of different classes may be loaded in the same CTU provided they are compatible with one another namely no segregation is required (IMDG Code 7.2.16). However, in view of the complexity, stowage of different substances within the same Cargo Transport Unit (Container) is considered by the Administration **the least preferred method** for loading and requires special consideration and subject to the conditions stipulated hereby.

8.1.1. According to the Vol 1 of the 2004 IMDG Code, Part 7 (7.2.1.11),

Substances of the same class may be stowed together without regard to segregation required by secondary hazard (subsidiary risk labels), provided the substances do not react dangerously with each other and cause any of the following:

- Combustion and/or evolution of considerable heat;
- Evolution of flammable, toxic or asphyxiant gases;
- The formation of corrosive substances; or
- The formation of unstable substances.

8.1.2. In order to approve the loading of a CTU with materials of the same class with conflicting secondary hazard, the shipper shall attach to the "Certificate of Containerised Dangerous Goods for International Transport", an additional statement, which clearly confirms that all the conditions of 7.2.1.11 are fulfilled. Within the said statement, the shipper must list all the materials shipped in the container and declare that all fully conform to the conditions stipulated in the IMDG Code.

8.1.3. Mixed stowage cannot contain cargoes with incompatible Emergency Schedules (EmS).

8.1.4. When "mixed stowage" goods are shipped in accordance with the definition of "Limited Quantity", the shipper or his agent must be able to show supporting (LQ) documentation and specify the size/weight of the inner and outer packages of the said cargo. However, segregation regulations required by the IMDG Code (Chapter 7.2) apply within the same Cargo Transport Unit.

8.1.5. Cargoes defined a "Marine Pollutant" (P) must be clearly marked so. When a substance, material or article possesses properties which meet the criteria of a Marine Pollutant but not identified in the IMDG Code, such substance, material or article shall be transported as a Marine Pollutant in accordance with the Code under the entry: ENVIRONMENTALLY HAZARDOUS SUBSTANCE, SOLID N.O.S... U.N 3077 or ENVIRONMENTALLY HAZARDOUS SUBSTANCE, LIQUID N.O.S...U.N 3082, as appropriate, unless there is a specific entry under Class 9. When cargo is declared a 'non-Marine Pollutant', the word "**No**" must be inserted in the appropriate space (**As a rule, all spaces allocated in the "Application for Permit to Load Dangerous Goods**" must be filled-in).

8.1.6. Cargoes defined as "DANGEROUS GOODS PACKED IN EXCEPTED QUANTITIES" are Dangerous Goods, which may be carried in accordance with the provisions of the IMDG Code by means of an alphanumeric code EO-E5 for each code which is specified as: Maximum net quantity of inner an outer packaging.

8.1.7. Prior loading containers with **Class/1** cargo, "Megger Test" (Attachment VIII, [Regulation 16(b)(4)] of "Port Regulations" 1982) and a certificate of "*Structural Serviceability of Freight Containers Packed with Goods of Class 1*", (As Per 2002 IMDG Code 7.4.6.4) must be presented to IMOT inspector.

8.1.8. **Chapter 3.3 Special Provisions Applicable to certain substances, Materials or Articles (Provision 311).**

"*Substances shall not be transported under this entry unless approved by the competent authority*....."

Example: substance classified as UN 3380 is labeled as Class 4.1 provided it has been diluted in accordance with Part I of the ***United Nations Manual of Tests and Criteria***. Such substance requires the approval of a Competent Authority (Maritime Administration or an establishment which has been authorized to act on behalf of the Administration).

In the absence of such approval the substance may be classified as Class/1 and/or refused for maritime transport.

8.1.9. An expert of appropriate professional capacity (e.g. Chemistry Engineer, Company's Safety Officer) capable of giving guidance and advice in case of emergency must always be accessible at the 24 hours emergency telephone number.

8.1.10. **Containers Under Fumigation (Detection of Dangerous Compounds in Containers)**

Containers under fumigation must be treated with extreme caution. Any such containers must be labeled accordingly with the appropriate label as follows:

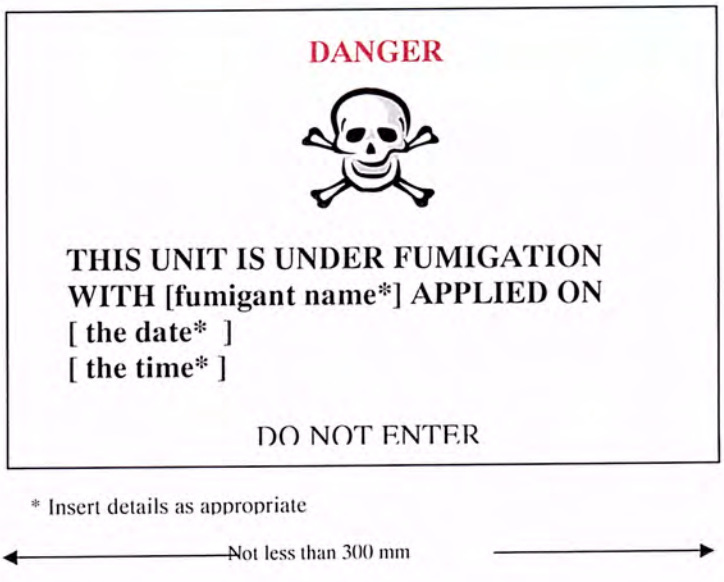

It is strongly recommended that Port Authorities handling containers under Fumigation be equipped with gas detection equipment capable of detecting leaks of any of the commonly used fumigation gases such as: Methyl Bromide, Phosphine, Hydrogen Cyanide, Chloropicrin, Styrene, Ammonia, Sulfuryl Difluoride, (Additionally Benzene).

Ships arriving with bulk cargoes under fumigation (Grain, Rice etc.) must observe all precautionary measures as specified in SHN CG-11(a) and in accordance with the recommendations of IMDG Code Supplement Edition 2008 Page 354 (MSC-MEPC.2/Circ 1 – "Disposal of Fumigant Material").

8.1.11. **Bulk Containers**

Dry Bulk Cargoes may be carried only in containers specifically constructed to carry such cargoes in accordance with the requirements of the IMDG Code **Chapter 4.3** and the technical specifications as per **Chapter 6.9** of the Code. Such containers must comply with ISO 1496-4:1991. Special attention to be given to the requirements of Chapter 4.3 Paragraph 4.3.2 "Additional Provisions Applicable to Bulk Goods of Classes 4.2, 4.3, 5.1, 6.2, 7 & 8".

Bulk container loaded with sift-proof sleeve, must be dedicated containers of open-top or of any other approved type of construction, loaded and handled in horizontal position only.

8.1.12 **Marine Pollutants**

The concept of a severe marine pollutant PP is deleted; they are just designated as P. The marine pollutant 'bullet' symbol (•) is also deleted, but a shipper will still be required to declare any consignment as being a marine pollutant in accordance with the IMDG criteria definition. There is a new section 2.9.3 describing these, and chapter 2.10 has been re-written. The new marine pollutant label is a dead tree and dead fish (See page No. 12).

8.1.13. **Excepted Quantities**

'Excepted Quantities' There is a new column 7b in the Dangerous Goods List for excepted quantities. These are small amounts, up to 30g or 30ml per inner package, 1kg per outer package. These are subject only to the rules of the new chapter 3.5, part 2 (classification) and some sections of 4.1 (packing) and 5.4 (documentation). They will be labelled with an '**Excepted Quantity**' label and the class number. The dangerous goods form shall state the words "Dangerous Goods in Excepted Quantities" together with the description of the shipment. An entry E0 in column 7b indicates that a substance may not be transported in excepted quantities. Codes E1 to E5 indicate different quantity limits according to a table in chapter 3.5. The total number of excepted quantity packages in a CTU shall not exceed 1000.

EXCEPTED QUANTITY LABLE



NEW MARINE POLLUTANT LABLE



8.1.14. **Liquid Bromine ISO-Tanks**

ISO-Tanks containing Liquid Bromine UN 1744 shall not have major defects in its structural components nor any distortion of the overall configuration great enough to prevent proper alignment of handling equipment, mounting and securing on chassis or vehicle, or insertion into ship's cells nor any deterioration in any component. Rusted-out metal in side-frames or frame supports is unacceptable.

8.1.15 Transport of Bio-diesels or Bio-fuels in Packaged Form is permitted Only in accordance with the requirements of the "IMDG Code as amended" namely: in DRUMS, IBC's or PORTABLE TANKS.

9. . SHIPS CARRYING DANGEROUS GOODS

9.1. Ship Suitability Criteria

- All ships loading or discharging Dangerous Goods at any Israeli port, must comply with the special requirements for ships specified in SOLAS II-2/19 (formerly, II-2/54), and the provisions of IMDG Code (Latest Amendment).

- All ships loading Dangerous Goods must also comply with the requirements of "MARPOL" Annex III (Regulation for the Prevention of Pollution by Harmful Substances Carried by Sea in Packaged Form) and the BC Code.

- All ships loading Dangerous Goods in any Israeli port, irrespective of the date of build, must be equipped with a "Fixed Gas Fire Detection and Extinction System for Cargo Compartments". If the extinguishing media (CO_2) is considered to be inefficient for certain categories of cargo, the Flag State may exempt the vessel from the above requirement provided it has furnished the vessel with a certificate clearly specifying the nature of the equivalent (alternative) fire fighting means. Vessels carrying cargoes, which require special extinguishing media (e.g. water-reactive, pyrophoric substances), should have sufficient quantities of inert powder (e.g. dry sand). Ships carrying materials, which require dedicated extinguishing media (e.g. Lithium UN 1415), must have such media on board.

- All ships carrying Dangerous Goods must carry on board the latest edition of the "IMDG Code" and be equipped in accordance with the requirements of the Medical First Aid Guide (MFAG).

9.2. **Ships' Certificates**

In order to conform to the above terms (Loading of DG), all vessels must provide "Document of Compliance" issued by the Flag State or by a recognized (IACS) Classification Society (Including vessels built prior 1984).

Vessel's "Document of Compliance" must clearly specify the classes of Dangerous Goods permitted to be carried in each of the ship's cargo compartments in accordance with the requirements of IMDG Code and the ship's DOC certificate.

The Document of Compliance must be accompanied by a "Master Plan", namely: *ship's side view conforming to a specific vessel. The "Master Plan" should show the ship's silhouette and the position of: Watertight Bulkheads, Living Quarters (crew accommodation, engine room, etc) and other structures on deck (such as mast-houses) if any. These details shall conform to the actual location on board in relation to the ship's cargo compartments and container bays.

- The ship's DOC should be formatted in accordance with MSC/Circ.1266, dated 18-Dec-2008.
- The validity of the "Document of Compliance" may not exceed **5** years period or the expiry of the ship's Safety Construction Certificate whichever the earlier.
- DG-DOC should preferably include "Annual Endorsement", or be accompanied by duly endorsed SAFCON/SEC Certificates. In case the DG-DOC is not formatted to include Annual Endorsement, the 3 months "Window" beyond the actual date of the Annual Endorsement of SAFCON/SEC is not transferable to the DOC to which the harmonized system of certification does not apply.
- Any exemption granted to a vessel by her Flag Administration must specify which, alternative or equivalent means in accordance with IMDG Code or SOLAS requirements the vessel is provided with.

The ship's Class or the Flag Administration must approve and endorse documents relating

to any changes in the ship's structure and/or her name.

10. CLASS 7

- The Israeli Ministry of Transport, Administration of Shipping and Ports, endorses the: *Recommendations on the safe transport of dangerous cargoes and related activities in port areas* (MSC/Circ. 675), as meeting the necessary safety requirements for Israeli Flagged vessels.

- The above relates to the carriage of Class 7 non-fissile (Low Specific Activity-LSA) materials. However, due consideration to be given in order to permit loading/discharging of Cobalt-60 (UN 2916) on board Israeli Flagged ships and while in transit or transhipment through Israeli ports.

- Ships calling Israeli ports carrying UN 2916 destined for Israel or in transit may be permitted to do so provided, the Israeli Administration (Shipping and Safety Inspectorate) is advised at least 72 hours in advance and official permission is granted.

- The Transport document and Dangerous Goods Manifest (FAL Form 7) will have an entry to confirms that " Cobalt -60 in the shipment has been specifically produced for immediate use in medical, consumer public health or agriculture applications"

- Particular emphasis shall be given to proper documentation and packing approved by competent authority.

- Each and every permit of discharge-transit-case of Class-7 cargoes shall be reviewed on individual basis.

12. CARGOES IN BULK

All vessels loading/carrying Dry Cargo in Bulk falling under the criteria of the BC Code, Appendix "B" (Possessing Chemical Hazard) must produce a "Document of Compliance" issued by the Flag State or Class, specifying cargoes the vessel is permitted to carry. Furthermore, all ships loading/discharging dry bulk cargoes in Israeli ports must conform to definitions and the requirements of the BC Code.

Israeli Ports dealing with Dry Cargo in Bulk shall be equipped with proper loading or discharge equipment to prevent marine environment and air pollution in port area.

IMOT Shipping Inspector may inspect every vessel loading cargo in bulk during, or after the completion of the loading (The actual inspection will or will not take place at the discretion of the Shipping Inspector).

All vessels loading cargo in bulk must produce the following:

- stability calculation including: damaged stability and all other relevant data, to satisfy the requirements of:
  - SOLAS -1974 Chapter VII and
  - The BC-Code.
- The vessel must be trimmed irrespective to the "Angle of Repose" of the cargo being loaded, to requirements* and to the satisfaction of IMOT Shipping Inspector.
- (*) For vessels of less than 100m in length, trimming is obligatory for any type of cargo in bulk to a uniform level. For vessels of 100m or more in length, trimming to vertical distance between lowest and highest level of cargo, b/10 or 1.5m whichever the lesser).
- Vessels loading bulk cargo with an angle of repose of 30° or less should be treated in accordance with "Grain Rules" of Chapter VI of the SOLAS. Vessels loading bulk cargo with an "Angle of Repose" between 30° and

INTERNATIONAL MARITIME ORGANIZATION
4 ALBERT EMBANKMENT
LONDON SE1 7SR

Telephone: 020 7587 3152
Fax: 020 7587 3210

IMO

E

Ref. T3/3.01

FAL.6/Circ.15
12 July 2006

DIFFICULTIES ENCOUNTERED IN THE SHIPMENT OF DANGEROUS CARGOES AND, IN PARTICULAR, SPORTING AMMUNITION AND RELATED COMPONENTS (IMDG CODE DIVISION 1.4S)

1 The Facilitation Committee, at its thirty-third session (3 to 7 July 2006), considered the difficulties encountered in the worldwide shipment of dangerous cargoes and in particular sporting ammunition (cartridges with inert projectile) and related components UN 0012, classified as IMDG Code division 1.4S.

2 The Committee, in an effort to foster the alleviation of the difficulties encountered, adopted the Advice on the shipment of sporting ammunition and related components (IMDG Code division 1.4S), which is set out in the annex.

3 The Committee remains concerned about the potential adverse effects the denial of shipment of dangerous cargoes might have on international trade and expeditious handling and shipment of such cargoes.

4 Member Governments and international organizations are urged to bring to the attention of the Committee any instances, together with the associated reasons, where the shipment of dangerous cargoes, encounter difficulties or are refused aboard ship or in or through ports, so as to enable the Committee to consider the matter further and to determine the actions required.

5 Member Governments are urged to bring this Circular and the annexed Advice to the attention of their Public Authorities, of owners, operators and masters of ships entitled to fly their flag and of owners and operators of ports located within the area under their jurisdiction.

***

ANNEX

ADVICE ON THE SHIPMENT OF DANGEROUS CARGOES AND, IN PARTICULAR, SPORTING AMMUNITION AND RELATED COMPONENTS (IMDG CODE DIVISION 1.4S)

General

1 Shipping and handling of dangerous cargoes, including IMDG Code division 1.4S materials, when carried out in compliance with the relevant provisions of SOLAS chapter VII, the IMDG Code and the recommendations contained in Recommendations on the safe transport of dangerous cargoes and related activities in port areas (MSC/Circ.675, as amended), should be considered as meeting the necessary safety requirements and should be facilitated.

Specific advice

2 Materials of IMDG Code division 1.4S are recognized worldwide as being among the safest products of IMDG Code class 1, with an excellent safety record. These materials are so packed and designed that any hazardous effects arising from accidental functioning are confined within the packages unless the package has been degraded by fire, in which case all blast or projection effects are limited to the extent that they do not scientifically hinder fire-fighting or other emergency response efforts in the immediate vicinity of the package.

3 In the IMDG Code, part 3, dangerous goods list, all prescriptions for the shipment are established on the basic concept that class 1.4S products are extremely safe for transport. In fact these goods belong to stowage category 5 (IMDG Code, 7.1.7.2 to 7.1.7.5.5) for which is prescribed the same stowage system both for cargo or passenger ships. Products in division 1.4S may be transported in any amount on passenger ships (IMDG Code, 7.1.5.2). They can be stowed in the outermost row (IMDG Code, 7.1.7.4.1.2), without stowage level containment prescription (IMDG Code, 7.7.1.4) and are exempt from stowage provisions related to securement (IMDG Code, 7.1.7.4.4) and separation from living quarters and machinery spaces (IMDG Code, 7.1.7.4.6) for class 1 (IMDG Code, 7.1.7.3).

Recommended actions

4 Member Governments and those concerned should facilitate the efficient, cost effective and expeditious handling and shipment of dangerous cargoes including IMDG Code division 1.4S materials, aboard ships and in and through ports, provided that these cargoes are shipped in accordance with the provisions in paragraph 1.

5 Member Governments should work with relevant national authorities and industry associations to raise awareness of the provisions of SOLAS chapter VII, the IMDG Code and the recommendations contained in Recommendations on the safe transport of dangerous cargoes and related activities in port areas (MSC/Circ.675, as amended), in order to help alleviate the difficulties encountered in the shipment of dangerous cargoes.

35° must perform stability calculations conforming to approved stability data of the vessel.

Every loading of any cargo in bulk must be accompanied by the following documents:

(a)-Moisture content of the cargo.

(b)-Loading plan.

(c)-Angle of Repose.

(d)-Transportable moisture limit.

(e)-The "Flow Moisture Point" of the cargo.

The provisions of the BLU Code apply to all vessels loading or discharging bulk cargoes in Israeli ports.

Dangerous cargoes in bulk such as Class 5.1, which requires very large amounts of water (hold flooding) to be extinguished incase of fire, must produce stability calculations approved by the Administration or by Class, proving adequate residual stability for such event.

Ships loading at Israeli ports or arriving with bulk cargoes, which require Engine Room bulkhead of a "A-60"standard (e.g. Class 5.1, 4.1), must be constructed accordingly (Regulation II-2/9.2.4.2.5) or alternatively, be equipped with a void space or a portable/movable bulkhead to keep a minimal 3metres distance from "portions which face the cargo area up to the underside of the deck of the navigating bridge".

13. PENALTIES AND/OR SANCTIONS FOR NON-CONFORMANCE

In case that any of the documents submitted does not conform to the requirements stipulated in this notice, the request to load Dangerous Goods and/or cargoes in Bulk may be required to be resubmitted and treated as a new loading request or rejected altogether.

13.1. Permit to load Dangerous Goods duly signed by a shipping inspector, must be available on board prior loading of Dangerous Goods. Any loading carried out prior receiving such permit, may result in total rejection of the subject vessel including a financial penalty. All dangerous cargoes already loaded may be ordered to be discharged and the vessel sailed without loading any DG cargoes.

13.2. A major non-conformance of a vessel related to operational and/or safety aspects may result in request to remove all Dangerous Cargoes already loaded in any Israeli port and/or in transit.

13.3. Any non-conformance related to stowage and segregation (IMDG Code requirements) of arriving ships is subject to penalties stipulated by the Israeli law and must be rectified prior ship's departure.

Repeated offenders may be subject to the following sanctions:

☒ Requested to be pre-inspected by Class inspector at anchor prior berthing

☒ 'In Depth' Port State inspection, which may result in detention and/or replacement of the ship's command

☒ Refusal to carry out any cargo operation

☒ Refusal of ship's entry to any Israeli port

☒ In case of severe and repeated non-conformance with IMDG Code requirements, a ship/s may be banned from entering Israeli territorial waters altogether.

☒ In severe cases of safety violations, criminal procedures may be initiated.

14. REMARKS

Cargoes, of extreme flammability (IMDG Code – 7.2.7.1.3) may not be transported on a ship carrying goods of Class 1. Furthermore, cargoes which possess very low flash point, a wide range of flammability, self-reactivity, low auto-ignition point, acute toxicity or any combination of the above, may require special consideration in regard to: segregation, "away from living quarters" and/or "away from a source of heat and/or ignition" Regulation II-2/19.3.2 (Reefer containers shall be treated as a potential "Source of Ignition").

Ships destined for Israel with Class/1 articles which contain explosive material having passed its date of expiry, may be subjected to additional safety requirements or rejected altogether. Additional requirements may include, among other: more rigorous separation/packing/securing arrangements and inspection prior berthing and/or loading, which will be carried by IMOT Shipping Inspector/s or by expert/s approved by the Israeli Maritime Authority.

Such cargoes should not be loaded abroad prior, IMOT explicit permission; a ship arriving without early notification may be barred from entering any Israeli port.

"SINCE THE PROPERTIES OF SUBSTANCES, MATERIALS OR ARTICLES WITHIN EACH CLASS MAY VARY GREATLY, THE DANGEROUS GOODS LIST SHALL ALWAYS BE CONSULTED FOR PARTICULAR PROVISIONS FOR SEGREGATION AS, IN THE CASE OF CONFLICTING PROVISIONS, THESE TAKE PRECEDENCE OVER THE GENERAL PROVISIONS".

IMOT INSPECTORS ARE FULLY AUTHORISED TO USE PROFESSIONAL JUDGEMENT AND DISCRETION IN THE FINAL APPROVAL OF LOADING, HANDLING AND/OR CARGOES IN TRANSIT OR TRANSHIPMENT.

15. APPENDIX I

Requirements for Containers Not Transporting Explosives

Doors

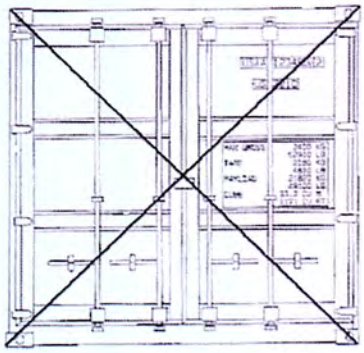

A1 A2

Structural Members

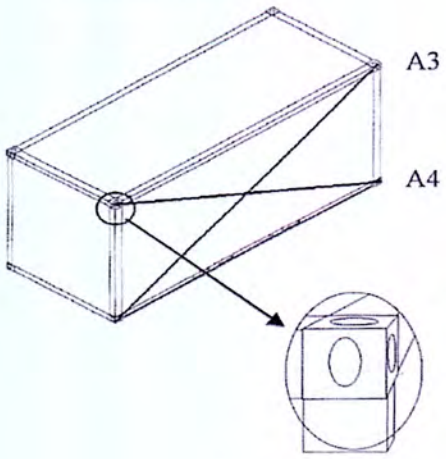

Corner Fitting

1.Doors

a) Door should close properly and open to 90°
b) If measured diagonally from each corner fitting, the difference should be no more than 3/8"(The comparison of A1 to A2 measurements)

2. Marking

a) The container must have a valid CSC plate for international service(49 CFR 450-453)
b) All gross weight markings on the container must match the gross weight markings on the containers CSC plate

3. Corner fittings

No cracks, Must be able to properly accept a twist lock
All four bottom corner fitting should lay flat on a chassis or level ground(within 3/8")
Measurement comparisons of A3 and A4 must be within 3/8"

4. Corner post

No one dent over 1" deep for multiple dents ½"

5. Bottom Rails

No bends in the flange on beam greater than 45°

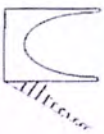

6. All other structural member

No tears, holes, or breaks with the exception of small dings

Cross members and Side wall

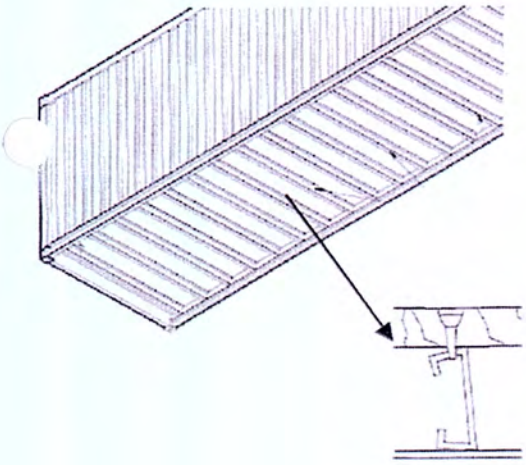

Cross Member

7. Cross Members/Forklift Pockets

a) No more than two cross members crushed and they may not be adjacent to each other
b) All welds must be intact including those on damaged cross members
c) No other dents greater than 2" deep
d) Floor does not sag (does not include rough lumber)
e) No torn members

8. Side walls and roof

a) Will survive voyage and keep cargo contained
b) Bulges must not interfere with loading

Additional Requirements for Containers Transporting Explosives

Additional Requirements for Containers Transporting Explosives

1. Damage General Requirements

a) Must contain a valid CSC plate (Regardless of destination)
b) Container must be weather tight(If sprayed with a water hose, no water would enter the container)
Note: No open top containers may be used
c) No dents in any structural members exceeding 3/4" including:
The top/bottom rails, corner post, or cross members header and door sill
d) No holes, or rusted out sections the:
Sides, ends, top, or bottom.
e) All door hardware must function properly and be in place(No twisted, seized, or broken door hardware)

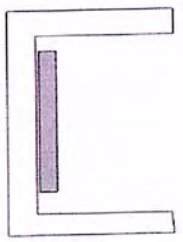

Lap Splice(Bad)

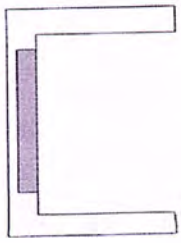

Butt Splice(Good)

. Repairs

a) No More than 2 proper splices per top or bottom side rails
b) No more than 1 proper splice in the top or bottom end rails or door header
c) No repairs are allowed in the door sill or corner post (including corner fitting)
Note: Proper splices are butt splices

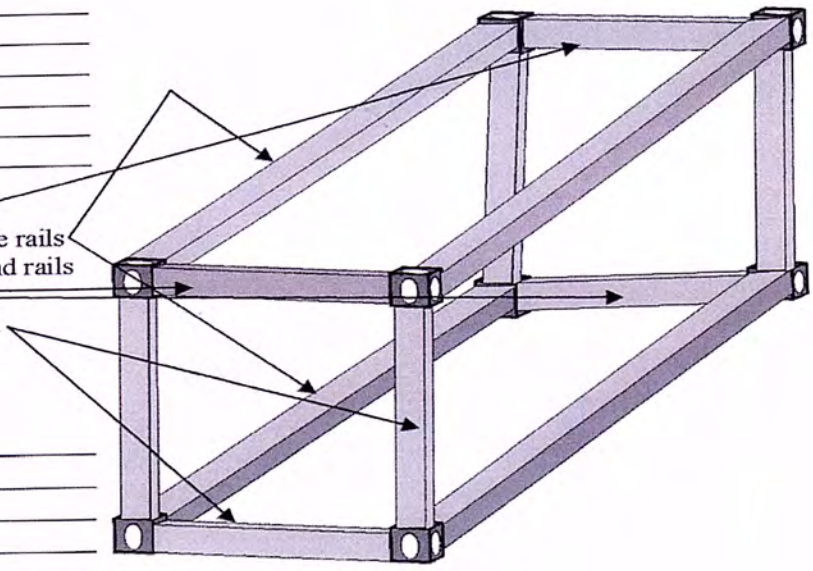

Door End

16. Appendix II

DECLARATION OF CONTAINERISED DANGEROUS GOODS FOR INTERNATIONAL TRANSPORT (DEMO EXAMPLE)

1 Date 29.11.2005	2 Shipper's Reference Number 558834
3 Shipper's Name & Address ABC MATERIALS & TECHNOLOGY No. 2 Bialik Street, Tel-Aviv, Israel	4Consignee's Name & Address XYZ ZARATUSTRA STR. 16-7 RIGA LV LATVIA
5 Port of Departure ASHDOD	6 Port of Destination RIGA
7 Carrier or Ship's Agent P&O NEDLLOYD	8 Ship's Name & Voyage No. NAUTIC/ 235

9 DESCRIPTION OF GOODS (Including Number & Kind of Packages, Weight)I	10 CONTAINER REGISTRATION NOS.	11WEIGHT (TONNES) Gross	Net
UN 2922 CORROSIVE LIQUID, TOXIC, N.O.S (>5%hydrofluoric Acid and >2%nitric Acid), Class 8, Subsidiary Class 6.1, PG I, 2X5 lit. Jerricans inside Fibreboard Box (4G). 165 Boxes total weight 1,650 kg	16/86 12570NOP	.21,004 Kg	1,650 kg
12 Flash Point (°C) Closed / Open cup: N/A	13 Type of Container 40"		
		14 Total Weight: 21,004. kg	

15 Correct Technical Name: >5%Hydrofluoric Acid and >2%Nitric Acid				
16 Class / Division 8	17UN / BC No. 2922	18 Label (s) Class 8, Class 6.1,	19 Marine Pollutant- **NO** Severe Marine Pollutant **NO** Environmental Hazardous Solid / Liquid- **NO**	☐ ☐ ☐
20Packing Group - I		21Stowage Category - B	22 Compatibility Group (Class 1)- N/A	
23 Additional Information – Attached Materials MSDS, Away from Living Quarters				
24 Emergency Procedure (EMS) – F-A, S-B		25 Medical First Aid Guide (MFAG) Flow chart.		
26 Emergency 24 Hours Telephone No- 972-3-9446677				

27 SHIPPER'S DECLARATION

I hereby declare that the contents of this consignment are fully and accurately described above by the correct technical name(s). proper shipping name(s), and are classified, packaged, marked and labelled and are in all respect in proper condition for transportation by ships according to the applicable requirements of the International Maritime Dangerous Goods Code and the Israeli Ports Regulations (Safety of Navigation) – 1982, as amended.

Signature: EYAL FABIAN
Status of Signatory Export Manager
Full Name EYAL FABIAN
Date 29.11.2005 Stamp

28 CONTAINER PACKING CERTIFICATE

I hereby declare that:
1. The a.m. containers were stuffed in my presence.
2. The containers were clean, dry and apparently fit for the transportation of the declared goods.
3. No incompatible substances have been packed into the containers.
4. All packages have been externally inspected for damage. The packages found sound and labelled, have been properly stuffed into and secured within the containers.
5. All the required placards were affixed on the containers.
6. The stuffing of the containers meets the requirements of the IMDG Code and Annex III to MARPOL 1973/78.

Signature: AVI LEON
Status of Signatory CONTAINER LOADER
Full Name AVI LEON
I.D. No. 59638742 Date 29.11.2005

משרד התחבורה
ADMINISTRATION OF
SHIPPING & PORTS
Inspectorate & Safety Division

מדינת ישראל
STATE OF ISRAEL
משרד התחבורה
Ministry of Transport

רשות הספנות והנמלים
אגף בכיר לפיקוח ובקרה

28 יוני 2010

תיקון/תוספת CG9(g) - טיפול בחומרים בסווג 1.4S

להלן נוסח מתוקן של ההנחיה בע"מ 6 פרק 5 סעיף 5.2 שורה אחרונה:

Due Consideration shall be excercised with regard to the handling and storage of Class 1.4S in conformance with the IMO recommendation as per FAL.6 Circ.15 + Annex, dated 12 July 2006 - (**Advice on the Shipment of Dangerous Cargoes and, in Particular, Sporting Ammunition and Related Components**).

הנספח מצורף בזאת

ר/ח אלכסנדר גרסון

מנהל תחום חומ"ס והגנת הסביבה

משרד התחבורה רשות הספנות והנמלים מדינת ישראל STATE of ISRAEL Shipping & Ports Administration MINISTRY of TRANSPORT

☎: 04-8632080 ; 🖷: 04-8632118, ת.ד. 806 ; חיפה 31007
Address: POB 806, Haifa, Zip Code 31007 , Israel, ☎: 972-4- 8632080, 🖷: 972-4-8632118

משרד התחבורה
ADMINISTRATION OF
SHIPPING & PORTS
Inspectorate & Safety Division

מדינת ישראל
STATE OF ISRAEL
משרד התחבורה
Ministry of Transport

רשות הספנות והנמלים
אגף בכיר לפיקוח ובקרה

06 יולי 2010

הנחיה - טיפול בחומרים בסווג 1.4S בתחום נמלי ישראל

"Due Consideration shall be excercised with regard to the handling and storage of Class 1.4S in conformance with the IMO recommendation as per FAL.6 Circ.15 + Annex, dated 12 July 2006 - (**Advice on the Shipment of Dangerous Cargoes and, in Particular, Sporting Ammunition and Related Components**)".

- בהמשך לתיקון/תוספת בנושא שלעיל, רספ"ן מנחה את נמלי ישראל ליישם את המלצות הארגון הימי הבין-לאומי (IMO) ולאפשר שטעון של מכולות עם מטען מסוג 1.4 S (במיוחד על תחמושת ספורט/ציד) כלהלן:

- לא תהיה מניעה למעבר המטען (Transit) במידה והוא נשאר על ספון האוניה בזמן שהותה בנמל ישראלי. המיקום של המכולה/ות יסומן ויגודר בזמן שהות האוניה בנמל, כמו כן, קוד הביטחון של האוניה (ISPS) יותאם להמצאות המטען בזמן שהות האניה בנמל. כל אמצעי הזהירות הנדרשים יתואמו עם שלטונות הנמל בהודעה של 48 שעות מראש לפחות.

- במידה וקיים צורך להוריד את המכולה/ות מהאוניה (Transshipment) לשם אחסון בנמל לתקופה שלא תעלה על 7 ימים:
- המכולה תאוחסן במיקום בטוח בנמל ובהפרדה מתאימה מחומרים מסוכנים אחרים. יש להדגיש כי בהתאם לקוד (IMDG), סווג החומר

☎: 04-8632080 ; 🖷: 04-8632118, ת.ד. 806 ; חיפה 31007
Address: POB 806, Haifa, Zip Code 31007 , Israel, ☎: 972-4- 8632080, 🖷: 972-4-8632118

מאפשר אחסון בקטגוריה 05 (Category 05) קרי: ניתן לאחסנו על או מתחת לסיפון, הוא מותר להובלה באוניות נוסעים ללא הגבלת כמות, ואינו חייב בהפרדה מיוחדת ממגורי צוות ו/או חדר המכונות. לאור כל האמור,לעיל אין לדעתנו שום מניעה מלאחסן את החומר בנמלי ישראל לתקופה של עד 7 ימים, כאמור.

- במידה והנמל ידרוש השגחה רציפה, של 24 שעות ביממה כולל כוננות אש, הוצאות השמירה יחולו על בעל המטען.

ר/ח אלכסנדר גרסון

מנהל תחום חומ"ס והגנת הסביבה

מכותבים:

ר/ח יגאל מאור, מנהל רספ"ן

ר/ח אליעזר שטרנברג, מנהל אגף לפקוח ובקרה, רספ"ן

מר. מנדי זזלצמן , מנהל חברת נמל חיפה

מר. שוקי סגיס, מנהל חברת נמל אשדוד

מר. סלונים דורון, מנהל חברת נמל אילת

מר. שמעון ליאור, ראש יחידת בטיחות ואיכו"ס, חנ"י

ר.ח שלמה מן, מפקח ראשי, רספ"ן אשדוד

מ/ר עזולאי עמרם, מפקח ראשי, סניף אילת

מר. יואב מרגלית , סמנכ"ל תפעול, חברת נמל חיפה

מר. מאהר מנסור, ראש יחידת חרום, חברת נמל חיפה

מר. מאיר עמר, מהנדס בטיחות, חברת נמל אשדוד

משרד התחבורה
והבטיחות בדרכים

ADMINISTRATION OF
SHIPPING & PORTS
Inspectorate & safety division

מדינת ישראל
STATE OF ISRAEL
משרד התחבורה
והבטיחות בדרכים
Ministry of Transport

רשות הספנות והנמלים
אגף בכיר לפיקוח ובקרה

February 20, 2011

<u>תיקון\תוספת CG9(g)</u>

להלן תוספת ל- CG9(g) בעמוד 2, פרק 2, סעיף 2.4

The IMDG Code 2010 Edition incorporating Amendment 35-10 has been adopted by the Marine Safety Committee (MSC) of the International Maritime Organization (IMO).

All vessels calling Israeli ports are required to have the IMDG (International Maritime Dangerous Goods) Code latest Amendment on board, as per IMOT Shipping Notice CG9(g) , Chapter 2, paragraph 2.4.

Masters, owners, agents and operators are required to note the amendments and act accordingly.

<u>הנספח מצורף בזאת</u>

☎: 04-8632080 ; 🖷: 04-8632118, ת.ד. 806 ; חיפה 31007
Address: POB 806, Haifa, Zip Code 31007 , Israel, ☎: 972-4- 8632080, 🖷: 972-4-8632118

משרד התחבורה
התשתיות הלאומיות והבטיחות בדרכים
Ministry of Transport, National
Infrastructure and Road Safety

מדינת ישראל
STATE OF ISRAEL

רשות הספנות והנמלים
אגף בכיר לפיקוח ובקרה
Shipping & Ports Administration
Inspectorate & safety division

10 March, 2013

CG 9(g) תיקון /תוספת

להלן תוספת ל- CG9(g) בעמוד 2, פרק 2 , סעיף 2.4

The IMDG (International Maritime Dangerous Goods) Code 2012 Edition, incorporating Amendment 36-12, has been adopted by the Maritime Safety Committee (MSC) of the International Maritime Organization (IMO), as set out in IMO resolution MSC 328/90/.

The International Maritime Solid Bulk Cargoes (IMSBC) Code and Supplement 2012 Edition, incorporating amendments 01-1.

All vessels calling at Israeli ports are required to have the IMDG (International Maritime Dangerous Goods) Code latest Amendment 36-12 on board, as per IMOT Shipping Notice CG9 (g), Chapter 2, paragraph 2.4., **by the end of 2013**.

Masters, owners, agents and operators are required to note the amendments and act accordingly.

31007 חיפה ; 806 .ת.ד ,04-8632118 :🖷 ; 04-8632080 :☎
Address: POB 806, Haifa, Zip Code 31007 , Israel, ☎: 972-4- 8632080, 🖷: 972-4-8632118
e-mail :techni@mot.gov.il

משרד התחבורה
והבטיחות בדרכים
ADMINISTRATION OF
SHIPPING & PORTS
Inspectorate & safety division

מדינת ישראל
STATE OF ISRAEL
משרד התחבורה
והבטיחות בדרכים
Ministry of Transport

רשות הספנות והנמלים
אגף בכיר לפיקוח ובקרה

2010 Amendment to the International Maritime Dangerous Goods (IMDG) Code

The IMDG Code 2010 Edition incorporating Amendment 35-10 (including all corrigenda and errata to the IMDG Code 2010 edition), has been adopted by the Marine Safety Committee (MSC) of the International Maritime Organization (IMO), as set out in IMO Resolution MSC 294(87). Details of Amendments to the EmS Guide have been set down in MSC circular MSC.1/Circ.1360.

The Amendment 35-10 will enter into force on 1st January 2012. This amendment may be adopted in whole or in part, on a voluntary basis from 1st January 2011.

All vessels calling Israeli ports are required to have the IMDG (International Maritime Dangerous Goods) Code latest Amendment on board, as per IMOT Shipping Notice CG9(g) , Chapter 2, paragraph 2.4.

Details of the approved amendments are available on the IMO website www.imo.org

Further to the above, note the following major changes in Amendment 35-10:

1. The Limited Quantity label has been changed.
2. The Marine Pollutant label has been amended.
3. A new Chapter 5.5 covers provisions for fumigated cargo transport units.
4. There are 16 new UN numbers going up to 3496, with explosives going up to 0509.
5. The BC Code is replaced by the IMSBC (International Maritime Solid Bulk Cargo) Code.

31007 חיפה ; 806 .ת.ד ,04-8632118 :🖷 ; 04-8632080 :☎
Address: POB 806, Haifa, Zip Code 31007 , Israel, ☎: 972-4- 8632080, 🖷: 972-4-8632118

22 February, 2015

תיקון/ תוספת

Amendment to Chapter 2.4 of CG 9 (g)

The 2014 edition of the International Maritime Dangerous Goods (IMDG Code), (Amendment 37-14) has been adopted by IMO Resolution MSC 372 (93). The amendment will come into force on 1 January 2016, and may be applied voluntarily as from 1 January 2015.

There are some changes to the 2014 edition of the (IMDG Code) compared to the previous edition. The significant changes are outlined below.

- Shippers and carriers handling Class 7 goods should be aware of updates to

The provisions reflecting the IAEA ***Regulations for the Safe Transport of Radioactive Material*** – *2012 Edition* (IAEA Safety Standards Series SSR-6), which supersedes the IAEA 2009 Edition.

- The format of the Dangerous Goods List (DGL) has been modified with two new columns: 16a and 16b (replacing Column 16, “Stowage and Segregation”). Instead of descriptive text, these columns now contain codes that are defined in Chapter 7, Column 16a, “Stowage and Handling”, contains (in addition to Stowage Category codes) new “SW” stowage codes and “H”, handling codes as defined in sections 7.1.5 and 7.1.6., column 16b, “Segregation”, contains the “SG” segregation codes that are defined in section 7.2.8.
- There are significant changes in Chapter 7.2, including more stringent segregation and stowage requirements for Class 4.3 and other water-reactive materials.

The DGL has many updates, including:

• For UN 3268, the PSN has been changed from “AIR BAG MODULES, AIR BAG INFLATORS or SEAT-BELT PRETENSIONERS” to “SAFETY DEVICES.”

• Asbestos is now to be shipped as UN 2212 “ASBESTOS, AMPHIBOLE” or UN 2590 “ASBESTOS, CHRYSOTILE.”

2/…

• The entry “CAPACITORS” has been divided into “CAPACITOR, ELECTRIC DOUBLE LAYER” (UN 3499), and “CAPACITOR, ASYMMETRIC” (UN 3508.(

“ • PACKAGING DISCARDED, EMPTY, UNCLEANED” (UN 3509) has been added **but can not be used for sea transport**.

• A series of shipping names for various adsorbed gases have been assigned between UN 3510 and UN 3526.

The following Special Provisions have been added:

- SP 367 through 376 (excluding 374, 375(
- SP 968 through 970

Special Provisions for shipping certain common items have been added or revised:

- SP 376, through 377 (Lithium Batteries damaged/defective, or for recycling/disposal).
- SP 961, 962 (Vehicles or Internal Combustion Engines; see also SP 970(

All vessels calling at Israeli ports are required to have the latest edition of the IMDG Code (37-14) on board, by the end of 2015, as per IMOT Shipping Notice CG9(g), Chapter 2, paragraph 2.4.

Masters, Owners, agents and operators are required to note the amendments and act accordingly.